DB Straight OD turning

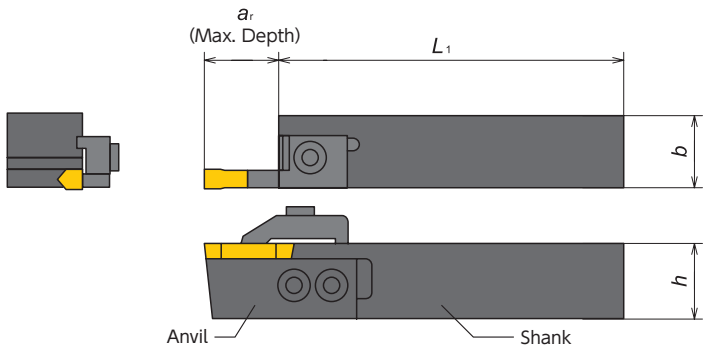

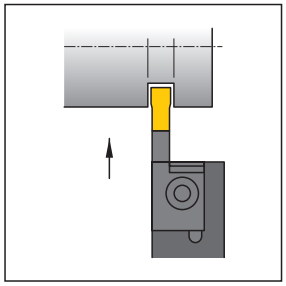

・Right-hand shown

Toolholder Body

Item Number	Stock R	Stock L	Dimensions (inch) h	b	L_1	a_r	Insert	Anvil Screw	Stock	Clamp Screw	Stock
DB1-1-16R/L	●	●	1.00	1.00	6.00	.750	VDB VDB..R	DAS41	●	SC40F10	●
DB1-1-20R/L	●	●	1.25	1.25	7.00	.750					

Note: Toolholder body comes with anvil screw and clamp screw. Anvils and Clamps are sold separately

Anvils and Clamps

Insert	DB-1-16R (Right hand) Anvil	Stock	Clamp	Stock	DB-1-16L (Left hand) Anvil	Stock	Clamp	Stock
VDB125	R1E04	●	CR1-1-E04	●	L1E04	●	CL1-1-E04	●
VDB156	R1E05	●	CR1-1-E06	●	L1E05	●	CL1-1-E06	●
VDB188 / VDB218	R1E06	●	CR1-1-E06	●	L1E06	●	CL1-1-E06	●
VDB250	R1E07	●	CR1-1-E07	●	L1E07	●	CL1-1-E07	●
VDB281 / VDB312	R1E09	●	CR1-1-E09	●	L1E09	●	CL1-1-E09	●
VDB344 / VDB375	R1E11	●	CR1-1-E11	●	L1E11	●	CL1-1-E11	●

Insert	DB-1-20R (Right hand) Anvil	Stock	Clamp	Stock	DB-1-20L (Left hand) Anvil	Stock	Clamp	Stock
VDB125	R2E04	●	CR1-1-E04	●	L2E04	●	CL1-1-E04	●
VDB156	R2E05	●	CR1-1-E06	●	L2E05	○	CL1-1-E06	●
VDB188 / VDB218	R2E06	●	CR1-1-E06	●	L2E06	●	CL1-1-E06	●
VDB250	R2E07	●	CR1-1-E07	●	L2E07	●	CL1-1-E07	●
VDB281 / VDB312	R2E09	●	CR1-1-E09	●	L2E09	●	CL1-1-E09	●
VDB344 / VDB375	R2E11	●	CR1-1-E11	●	L2E11	●	CL1-1-E11	●

Inserts ➡ H18

DB Face Grooving

Curve In

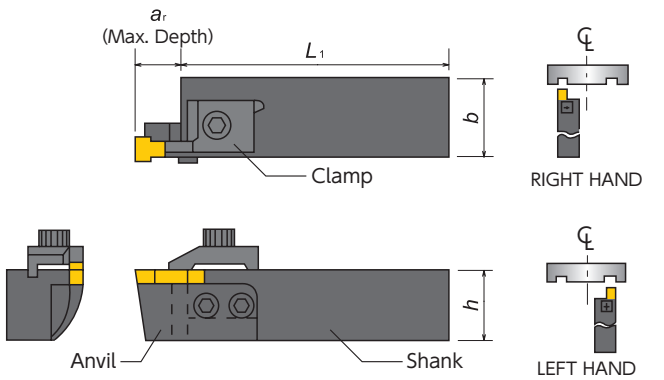

・Right-hand shown

Curve Out

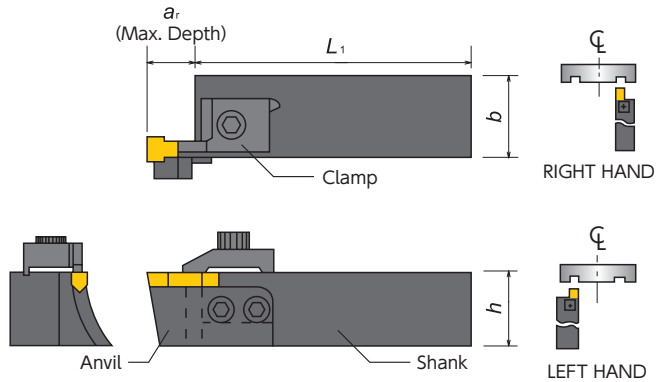

・Right-hand shown

Toolholder Body

Item Number	Stock R	Stock L	Dimensions (inch) h	b	L_1	a_r	Insert	Anvil Screw	Stock	Clamp Screw	Stock
DB7-1-7-16R/L	○	●	1.00	1.00	6.00	.750	VDB VDB..R	DAS41	●	SC40F10	●
DB7-1-7-20R/L	●	●	1.25	1.25	7.00	.750					

Note: Toolholder body comes with anvil screw and clamp screw. Anvils and Clamps are soid separately

Anvils and Clamps

Curve In

Shank	Insert	O.D. range 3" - 4 1/2"		4 1/2" - 7"		7" - 14"		14" and over		Clamp	Stock
DB7-1-7-16R DB7-1-7-20R	VDB156 / VDB188	DBA-3305	○	DBA-3405	○	DBA-3505	○	DBA-3605	○	CR1-1-E06A	○
	VDB250	DBA-3307	○	DBA-3407	○	DBA-3507	○	DBA-3607	○	CR1-1-E07A	●
	VDB281 / VDB312	DBA-3309	○	DBA-3309	○	DBA-3509	○	DBA-3509	○	CR1-1-E09A	○
	VDB344 / VDB375	DBA-3311	○	DBA-3311	○	DBA-3511	○	DBA-3511	○	CR1-1-E11A	●
DB7-1-7-16L DB7-1-7-20L	VDB156 / VDB188	DBA-7305	○	DBA-7405	○	DBA-7505	○	DBA-7605	○	CL1-1-E06A	○
	VDB250	DBA-7307	○	DBA-7407	○	DBA-7507	○	DBA-7607	○	CL1-1-E07A	●
	VDB281 / VDB312	DBA-7309	○	DBA-7309	○	DBA-7509	○	DBA-7509	○	CL1-1-E09A	○
	VDB344 / VDB375	DBA-7311	○	DBA-7311	○	DBA-7511	○	DBA-7511	○	CL1-1-E11A	○

Curve Out

Shank	Insert	O.D. range 3" - 4 1/2"		4 1/2" - 7"		7" - 14"		14" and over		Clamp	Stock
DB7-1-7-16R DB7-1-7-20R	VDB156 / VDB188	DBA-4305	○	DBA-4405	○	DBA-4505	○	DBA-4605	○	CR1-1-E06A	○
	VDB250	DBA-4307	○	DBA-4407	○	DBA-4507	○	DBA-4607	○	CR1-1-E07A	●
	VDB281 / VDB312	DBA-4309	○	DBA-4309	○	DBA-4509	○	DBA-4509	○	CR1-1-E09A	○
	VDB344 / VDB375	DBA-4311	○	DBA-4311	○	DBA-4511	○	DBA-4511	○	CR1-1-E11A	●
DB7-1-7-16L DB7-1-7-20L	VDB156 / VDB188	DBA-8305	○	DBA-8405	○	DBA-8505	○	DBA-8605	○	CL1-1-E06A	○
	VDB250	DBA-8307	○	DBA-8407	○	DBA-8507	○	DBA-8607	○	CL1-1-E07A	●
	VDB281 / VDB312	DBA-8309	○	DBA-8309	○	DBA-8509	○	DBA-8509	○	CL1-1-E09A	○
	VDB344 / VDB375	DBA-8311	○	DBA-8311	○	DBA-8511	○	DBA-8511	○	CL1-1-E11A	○

Inserts ➡ H18

VDB

● : 1st Choice ● : 2nd choice

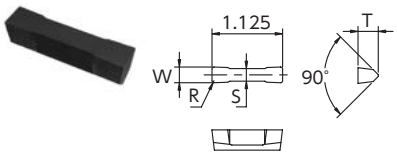

		SiAlON		Whisker	Alumina - TiC
Steel	P				
Stainless Steel	M				
Cast Iron	K	●	●	●	●
Non-Ferrous Material	N				
Heat Resistant Alloy	S	●	●	●	
Hardened Material	H			●	●

Item Number	W	R	S	T	SX9	SX5	WA1	HC2
VDB 125 A015 T0225	.125	.015	.106	.250				●
VDB 156 A015 T0225	.156	.015	.106	.250				●
VDB 188 A015 T0225	.188	.015	.144	.250				●
VDB 218 A015 T0225	.218	.015	.144	.250				●
VDB 250 B015 T0225	.250	.015	.202	.337				●
VDB 250 B031 T0220	.250	.031	.202	.337	●	●	●	
VDB 250 B062 T0220	.250	.062	.202	.337	●			
VDB 281 B015 T0225	.281	.015	.202	.337				●
VDB 312 B015 T0225	.312	.015	.202	.337				●
VDB 312 B031 EX001	.312	.031	.202	.337			●	
VDB 312 B031 T0220	.312	.031	.202	.337		●		
VDB 312 B062 EX001	.312	.062	.202	.337			●	
VDB 312 B062 T0220	.312	.062	.202	.337		●		
VDB 344 B015 T0225	.344	.015	.275	.337				●
VDB 375 B015 T0225	.375	.015	.275	.337				●
VDB 375 B031 EX001	.375	.031	.275	.337			●	
VDB 375 B031 T0220	.375	.031	.275	.337		●		
VDB 375 B046 E02	.375	.046	.275	.337	●			
VDB 375 B046 T0220	.375	.046	.275	.337	●			
VDB 375 B062 E02	.375	.062	.275	.337	●			
VDB 375 B062 T0220	.375	.062	.275	.337	●	●		

Holders ➡ H16 • H17

VDB..R

● : 1st Choice ● : 2nd choice

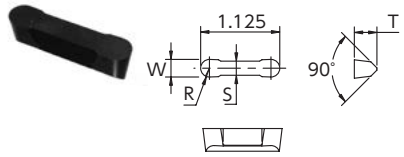

		SiAlON		Whisker	Alumina - TiC
Steel	P				
Stainless Steel	M				
Cast Iron	K	●	●	●	●
Non-Ferrous Material	N				
Heat Resistant Alloy	S	●	●	●	
Hardened Material	H			●	●

Item Number	W	R	S	T	SX9	SX5	WA1	HC2
VDB 125 RA T0225	.125	.063	.106	.250				●
VDB 156 RA T0225	.156	.078	.106	.250				●
VDB 188 RA T0225	.188	.094	.144	.250				●
VDB 218 RA T0225	.218	.109	.144	.250				●
VDB 250 RB T0220	.250	.125	.202	.337		●	●	
VDB 250 RB T0225	.250	.125	.202	.337				●
VDB 281 RB T0225	.281	.141	.202	.337				●
VDB 312 RB T0225	.312	.156	.202	.337				●
VDB 344 RB T0225	.344	.172	.275	.337				●
VDB 375 RB T0225	.375	.188	.275	.337				●

Holders ➡ H16 • H17